Haute Living

MEDIA KIT 2014

2014 Haute Regions

MIAMI

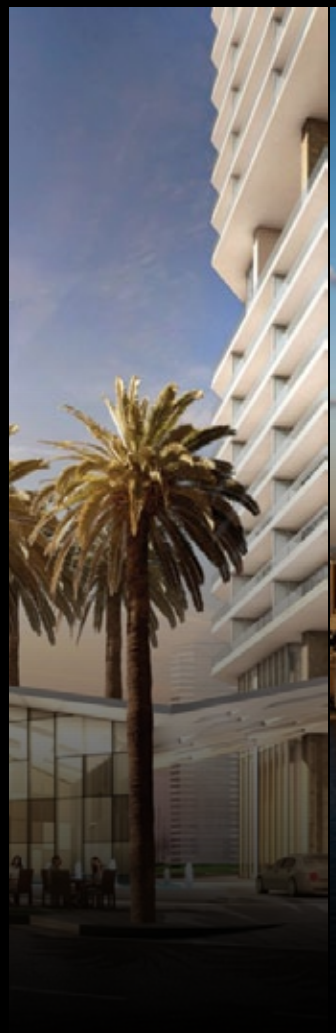

NEW YORK

SAN FRANCISCO

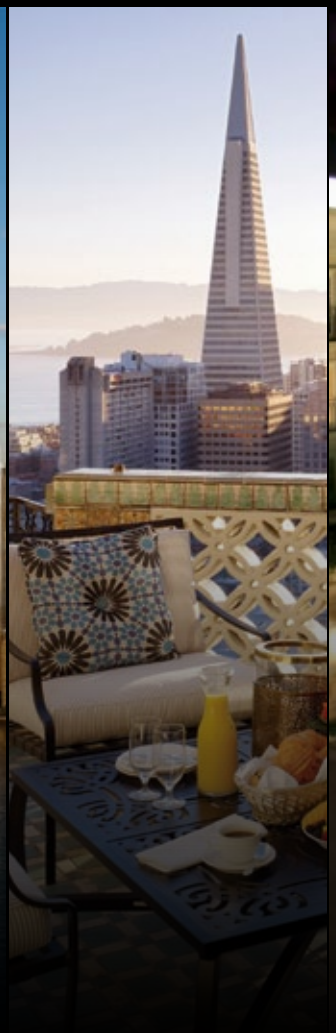

LOS ANGELES

Mission Statement

HAUTE LIVING produces a leading network of luxury publications currently serving New York, Miami, Los Angeles, and San Francisco with plans to take its highly successful platform into multiple cities in both the U.S. and international markets. Through these distinguished regional publications, Haute Living uniquely reaches into the hearts and minds of the most influential and
elusive consumers in our country's most affluent destinations.

Haute Living is a highly exclusive publication; if you do not fly private, stay in five star properties, or own homes valued in excess of $3 million, you do not have access to our magazines. To ensure we reach the most elite audience, Haute Living utilizes a controlled distribution model which ensures our publications are placed directly in the hands of the world's most powerful and acquisitive consumers. With every issue in each of our four markets, roughly one-third of our magazines are mailed to homes valued at $3+ million, one-third are aboard private jet flights and in private airports, and one-third are directly distributed to five star hotels and high-traffic luxury locations in each market.

Eighty percent of the wealth in the United States is controlled by less than ten percent of the population. The vast majority of that elusive demographic resides in the four markets we currently serve. By reaching ultra affluent consumers in America's most elite markets, Haute Living offers luxury advertisers a highly efficient opportunity to target the most powerful consumers in the nation's most concentrated centers of wealth.

The collective goal of Haute Living Magazine and HauteLiving.com is to provide editorial content that is as sophisticated as our readers.

Circulation

HAUTE LIVING'S calculated distribution model has a proven advantage over that of other publications, as our magazine is delivered to people who live by the mantra, "Price is no object." We currently have four publications: Haute Living New York, Haute Living Miami, Haute Living Los Angeles, and Haute Living San Francisco. We offer media buys on a city level, regional level, or national level.

SF

NY

MIA

LA

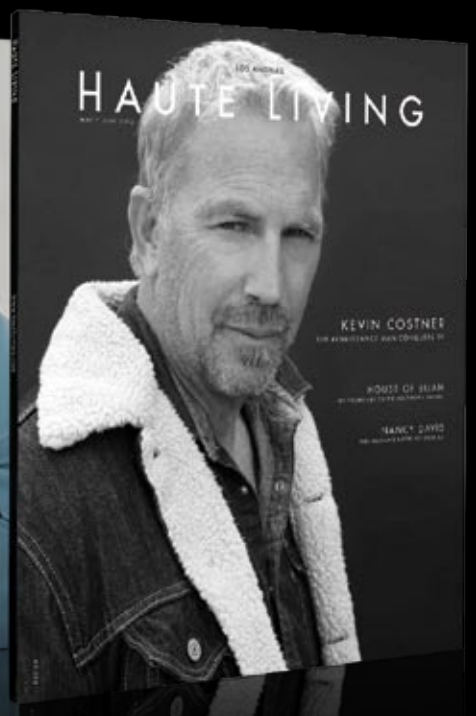

Miami

35,000 COPIES
LAUNCH DATE: 2005, 6X A YEAR

1. Haute Living Miami is distributed onboard private jet flights and in FBOs (Private Airports)

a) Onboard Private Flights: Aspen, Boston, Chicago, Dallas, Denver, Las Vegas, Los Angeles, Long Island (NY), New York, San Francisco, Phoenix, Seattle, Washington DC, West Palm Beach, Miami and London.

b) FBOs: Aspen, Boston, Chicago, Connecticut, Dallas, Denver, Houston, Las Vegas, Los Angeles, Long Island (NY), Mexico City, Moscow, New York, Orange County, San Francisco, Phoenix, Seattle, Washington DC, West Palm Beach, Miami and London.

2. Five Star Hotels: Haute Living Miami is distributed in the rooms of such hotels as:

a) Palm Beach: The Breakers, Ritz Carlton and Four Seasons.

b) Miami Beach: Mandarin, Setai, Acqualina Resort & Spa, Trump International Resort, Canyon Ranch, Sagamore Hotel and The Ritz Carlton Key Biscayne, Coconut Grove and South Beach.

3. Exclusive Mailing List: We have a proprietary list that only has homes valued over $3 million in specific areas of South Florida. Haute Living Miami targets Coral Gables, Miami Beach, Fisher Island, Bal Harbour, Sunny Isles, Palm Beach and beyond.

a) Haute Living Miami has also built a powerful list that contains all major jet owners in South Florida, Forbes 400 National Members, South Florida VIP's and all Billionaires in Florida.

4. Haute Living Miami is distributed in high traffic locations on a bi-weekly basis: Lincoln Road, Bal Harbor Mall, Worth Avenue Palm Beach, Merrick Park in Coral Gables and The Design District.

San Francisco

35,000 COPIES
LAUNCH DATE: 2009, 6X A YEAR

1. Haute Living San Francisco is distributed onboard private jet flights and in FBOs (Private Airports)

a) Onboard Private Flights: Aspen, Boston, Chicago, Dallas, Denver, Las Vegas, Los Angeles, Long Island (NY), New York, San Francisco, Phoenix, Seattle, Washington DC, West Palm Beach, Miami and London.

b) FBOs: Aspen, Boston, Chicago, Connecticut, Dallas, Denver, Houston, Las Vegas, Los Angeles, Long Island (NY) Mexico City, Moscow, New York, Orange County, San Francisco, Phoenix, Seattle, Washington DC, West Palm Beach, Miami and London.

2. Five Star Hotels: Haute Living San Francisco is distributed in the rooms of such hotels as:

a) San Francisco: St. Regis, Mandarin, The Ritz Carlton, Hotel Vitale, Fairmont Hotel, and The Ritz Carlton Residences.

b) Silicon Valley: Four Seasons and Rosewood Sand Hill

c) Napa: Meadowood, The Carneros Inn and Bardessono

3. Exclusive Mailing List: We have a proprietary list of homes valued over $3 million in specific areas of Napa, San Francisco, Silicon Valley and Carmel.

a) Haute Living San Francisco has also built a powerful list that contains all major jet owners in The Bay Area, Forbes 400 National Members, The Bay Area VIP's and all Billionaires in The Bay Area.

4. Haute Living San Francisco is distributed in high traffic locations in San Francisco Union Square and Palo Alto Stanford Shopping Center.

New York

35,000 COPIES
LAUNCH DATE: 2007, 6X A YEAR

1. Haute Living New York is distributed onboard private jet flights and in FBOs (Private Airports)

a) Onboard Private Flights: Aspen, Boston, Chicago, Dallas, Denver, Las Vegas, Los Angeles, Long Island (NY), New York, San Francisco, Phoenix, Seattle, Washington DC, West Palm Beach, Miami and London.

b) FBOs: Aspen, Boston, Chicago, Connecticut, Dallas, Denver, Houston, Las Vegas, Los Angeles, Long Island (NY) Mexico City, Moscow, NY, Orange County, San Francisco, Phoenix, Seattle, Washington DC, West Palm Beach, Miami and London.

2. Five Star Hotels: Haute Living New York is distributed in the rooms of such hotels as: Trump International, The Surrey, The Pierre, Ritz Carlton Battery and Central Park, Plaza Athanee and The Waldorf Towers.

3. Exclusive Mailing List: We have a proprietary list of homes valued over $3 million in specific areas of New York.
We mail to homes in NYC, Hamptons, and Greenwich, CT.

a) Haute Living New York has also built a powerful list that contains all major jet owners in New York/Connecticut,
Forbes 400 National Members, New York VIP's and all Billionaires in New York/Connecticut.

4. Haute Living New York is distributed in high traffic locations in Soho, Madison Avenue, Fifth Avenue Buildings, and Hamptons (Summer) Palm Beach (Winter). We also distribute in over 100 high end buildings on Fifth Avenue, Park Avenue, Upper East Side, Central Park and Soho/Tribeca.

Los Angeles

35,000 COPIES
LAUNCH DATE: 2008, 6X A YEAR

1. Haute Living Los Angeles is distributed onboard private jet flights and in FBOs (Private Airports)

a) Onboard Private Flights: Aspen, Boston, Chicago, Dallas, Denver, Las Vegas, Los Angeles, Long Island (NY), New York, San Francisco, Phoenix, Seattle, Washington DC, West Palm Beach, Miami and London.

b) FBOs: Aspen, Boston, Chicago, Connecticut, Dallas, Denver, Houston, Las Vegas, Los Angeles, Long Island (NY) Mexico City, Moscow,
New York, Orange County, San Francisco, Phoenix, Seattle, Washington DC, West Palm Beach, Miami and London.

2. Five Star Hotels: Haute Living Los Angeles is distributed in the rooms of such hotels as:

a) Los Angeles: The Peninsula Beverly Hills, Montage Beverly Hills, SLS Beverly Hills, The Ritz Carlton Marina del Ray,
Malibu Inn and Terranea Resort in Palos Verdes

b) Orange County: Laguna Beach Ritz Carlton and Montage Laguna Beach.

3. Exclusive Mailing List: We have a proprietary list of homes valued over $3 million in specific areas of Los Angeles and Orange County. We mail to homes in Bel Air, Beverly Hills, Hollywood Hills, Malibu, Brentwood, Pacific Palisades, Laguna Beach and Newport Beach.

a) Haute Living Los Angeles has also built a powerful list that contains all major jet owners in Los Angeles/Orange County and Las Vegas, Forbes 400 National Members, LA VIP's and all Billionaires in Los Angeles/Orange County and Las Vegas.

4. Haute Living Los Angeles is distributed in high traffic locations on Rodeo Drive, Melrose Avenue, South Coast Plaza and Pacific Coast Highway in Malibu.

2014 Editorial Calendar

PRIORITY INFO	NEW YORK	MIAMI	LOS ANGELES	SAN FRANCISCO
Issue	**Dec 2013-Jan 2014**	**Dec 2013-Jan**	**Jan-Feb**	**Jan-Feb**
Editorial	WALL STREET	MIAMI HAUTE LIST	AWARDS ISSUE	GREEN ISSUE
Power Player	LUXURY PLAYERS	DESIGN PROS	H'WOOD AGENTS	CHEFS
Space Closing	December 1	December 1	January 3	January 3
Material Closing	December 8	December 8	January 10	January 10
Delivery	December 15	December 15	January 17	January 17
Issue	**Feb-Mar**	**Feb-Mar**	**Mar-Apr**	**Mar-Apr**
Editorial	PHILANTHROPY	YACHT	LUXURY ISSUE	REAL EST/DESIGN
Power Player	CLUB KINGS	FOOD CHEFS	RODEO DR. PLAYERS	DESIGN/REALTORS
Space Closing	February 1	February 1	March 1	March 1
Material Closing	February 8	February 8	March 8	March 8
Delivery	February 15	February 15	March 15	March 15
Issue	**Apr-May**	**Apr-May**	**May-Jun**	**May-Jun**
Editorial	REAL EST/DESIGN	HAUTE 100	REAL EST/DESIGN	NAPA WINE AUCTION
Power Player	DESIGN PROS	HOTEL GMS	DESIGN/REALTORS	VINTNERS
Space Closing	April 1	April 1	May 2	May 2
Material Closing	April 8	April 8	May 9	May 9
Delivery	April 15	April 15	May 16	May 16
Issue	**Jun-Jul**	**Jun-Jul**	**Jul-Aug**	**Jul-Aug**
Editorial	HAMPTONS	HAMPTONS/TROPEZ	LAS VEGAS	SUMMER ISSUE
Power Player	HOTEL GMS	LUXURY LEADERS	CLUB KINGS	TECH PLAYERS
Space Closing	June 1	June 1	July 1	July 1
Material Closing	June 8	June 8	July 8	July 8
Delivery	June 15	June 15	July 15	July 15
Issue	**Aug-Sep**	**Aug-Sep**	**Sept-Oct**	**Sept-Oct**
Editorial	FALL FASHION	FALL FASHION	FALL FASHION	FALL FASHION
Power Player	PHILANTHROPISTS	PHILANTHROPISTS	PHILANTHROPISTS	PHILANTHROPISTS
Space Closing	August 1	August 1	September 1	September 1
Material Closing	August 8	August 8	September 8	September 8
Delivery	August 15	August 15	September 15	September 15
Issue	**Oct-Nov**	**Oct-Nov**	**Nov-Dec**	**Nov-Dec**
Editorial	HAUTE 100	ART BASEL	MALIBU ISSUE	HAUTE 100
Power Player	CHEFS	CLUB KINGS	HOTEL GMS	HOTEL GMS
Space Closing	October 3	October 3	November 1	November 1
Material Closing	October 10	October 10	November 8	November 8
Delivery	October 17	October 17	November 15	November 15

2014 DEMOGRAPHICS

Haute Living offers luxury advertisers a highly efficient opportunity to target the most powerful consumers in the nation's most concentrated centers of wealth.

HAUTE LIVING ATTRACTS MATURE READERS

- Average Age 50.3
- Median Age 49.1
- The sample is composed of 56% men and 44% women

MANY HAUTE LIVING READERS OWN LUXURY VEHICLES

- Three out of four Haute Living readers who responded to the survey (75%) indicate ownership / leasing of a vehicle valued at $100,000 or more.
- A majority of the Haute Living readers surveyed (55%) plan to purchase or lease a new car in the next 12 months.

HAUTE LIVING READERS OWN EXPENSIVE HOMES

- Nearly all Haute Living readers own their primary residence (96%).
- Over three in five indicate that their primary residence is valued at $10 million or more (63%), and one quarter (26%) have a primary residence valued at $ 5 to $ 9.9 million.
- Average Value $10,400,400
- Median Value $11, 200,000
- Many Haute Living readers own a second home (82%) and most of the second homes are worth at least $1 million (74%).
- Average Value $7,400,000
- Median Value $7,600,000

HAUTE LIVING READERS OWN LUXURY WATCHES

A sizeable number of Haute Living readers own watches worth at least $5000 and many have premium value watches.

- $5,000 to $9,999 30%
- $10,000 to $19,999 26%
- $20,000 to $49,999 35%
- $50,000 to $99,999 51%
- $100,000 and more 47%

HAUTE LIVING READERS SPEND A SIGNIFICANT AMOUNT OF MONEY ON JEWELRY

· Close to two-thirds of the Haute Living readers surveyed (64%) report spending at least $50,000 or more on jewelry for themselves and /or as gifts per year.

- Average $84,700
- Median $95,300

MOST HAUTE LIVING READERS AVAIL THEMSELVES WITH PREMIUM TRAVEL SERVICE

- Only 1% of the Haute Living readers who participated in the survey use coach class for air travel.
- In contrast , 45% fly on privately owned jets and 22% use rented private jets.
- Many others fly first class (35%) and/or business class (10%).

2014 MAGAZINE AD SPECS

IMPORTANT NOTES

Haute Living Magazine only accepts InDesign, Photoshop, Illustrator or PDF files. We do not accept Quark files. Illustrator files should be saved as EPS files, with all images embedded and all fonts converted to outline. InDesign files should be packaged with all links and fonts included. All PSD, Tiff, JPG and EPS files should be flattened and at its highest resolution.

All images used in the ad should be CMYK and at a resolution of 300 dpi. We do not accept those in RGB, Pantone or PMS color format. Our printer recommends at least a 3/16" safety area of no live text from the trim and 1/2" from the spine. Doing this helps prevent important text from possibly getting trimmed off or disappearing into the spine during the final cutting and binding process.

PDF FILES

PDFs may be provided as PDF/X1a file format. When placing images in your layout program, make sure your document is flattened before creating a PDF. This applies to layered graphics such as Photoshop PSD files or layered Illustrator files. Transparency can also cause a problem. Flattening your layout will show you any problems that may arise later.

IN-HOUSE AD CREATION

When requesting an in-house ad design all imagery and copy must be provided. Provided image files must be no less than 300 dpi at 100% of placement size. All material files must be labeled and may be e-mailed to our Art Department at artwork@hauteliving.com or uploaded to our FTP site.

DELIVERY OF MATERIALS

PLEASE LABEL ALL MATERIALS SUBMITTED WITH THE FOLLOWING:

- ADVERTISER NAME
- PUBLICATION LOCATION
- ISSUE DATE

MAIL

Haute Living Magazine
Production Department
2 NE 40th Street, Suite 403 Miami, FL 33137

EMAIL

If the ad is under 7MB it can be e-mailed to: artwork@hauteliving.com

PRODUCTION CONTACT

artwork@hauteliving.com / Andre Frazier

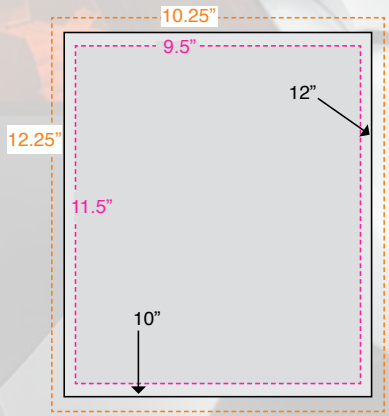

FULL PAGE

Live Area: 9.5" x 11.5"
Trim: 10" x 12"
Bleed: 10.25" x 12.25"

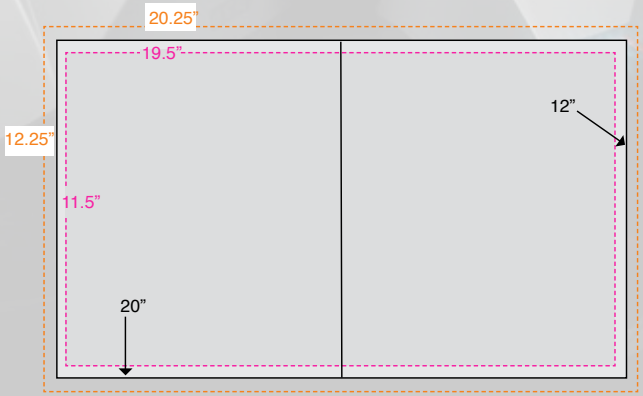

SPREAD

Live Area: 19.5" x 11.5"
Trim: 20" x 12"
Bleed: 20.25" x 12.25"

2014 Rate Card

City

35,000 COPIES • ONE MARKET

OFFERS	1X	3X	6X
Full Page	$6,900	$6,325	$5,750
Double Page Spread	$11,500	$9,775	$8,625
Inside Front Cover Spread	$18,400	$17,250	$16,100
Inside Back Cover	$8,050	$7,475	$6,900
Back Cover	$13,800	$11,500	N/A

Regional

70,000 COPIES • TWO MARKETS: EAST OR WEST COAST

OFFERS	1X	3X	6X
Full Page	$11,500	$10,925	$10,350
Double Page Spread	$18,400	$17,825	$16,100
Inside Front Cover Spread	$20,700	$18,400	$17,250
Inside Back Cover	$13,800	$13,225	$12,075
Back Cover	$19,550	$17,250	N/A

National

140,000 COPIES • ALL FOUR MARKETS

OFFERS	1X	3X	6X
Full Page	$23,100	$21,850	$20,700
Double Page Spread	$36,800	$34,500	$32,200
Inside Front Cover Spread	$41,400	$36,800	$34,500
Inside Back Cover	$27,600	$25,300	$24,150
Back Cover	$39,100	$34,500	N/A